ITEM #

MODEL #

NAME #

SIS #

AIA #

Vegetable Slicer
TRS Vegetable Slicer - 1 Speed - 370W

600418 (DTRS1V371) Vegetable slicer, 1 speed 340 rpm, 370 W. Lever operated hopper in stainless steel for intense use

Short Form Specification

Item No.

Universal vegetable slicer for more than 80 different types of cuts, thanks to several stainless steel dw safe discs.
Parts in contact with food - stainless steel lever, stainless steel hopper and cutting chamber - can be removed without tools and placed in a dishwasher for fast cleaning.
Compact and ergonomic design, user-friendly lever (better pressure control, with less effort for arms and shoulder), designed for right and left handed users.
Angled base (20°) facilitates loading and unloading operations. Long vegetable hopper (55,5mm diameter), integrated in the wide 3/4 moon round hopper (215cm²) in stainless steel. Asynchronous industrial motor for heavy duty and longer life. High discharge zone (up to 20cm) for GN containers. Pulse control for precise slicing. Automatic start/stop function will stop the machine when the lever hopper is lifted and will restart automatically when lowered. Waterproof (IP55) control panel and aluminium alloy motor base completely closed for complete protection against strong jets of water.

APPROVAL:

Main Features

- Suitable for 100-400 meals for table service and up to 800 meals for catering service.
- Vegetable slicer with slicing, grating, shredding (julienne) as well as dicing and French fries cutting capability.
- Ergonomically designed for right and left-handed users, frontal working and to reduce working space around the machine.
- All parts in contact with food are removable without the use of tools, stainless steel hopper, stainless steel lever and cutting chamber are dishwasher safe.
- Hopper easily removed for cleaning.
- Base inclined at 20° to provide easy loading and unloading.
- High discharge zone permits the use of deep GN containers (up to 20cm).
- Complete and wide selection of blades and grids available (diam. 205 mm).
- Pulse function for precise cutting.
- Magnetic safety system and motor brake. Prevents machine from running when lever swings away or is open.
- Automatic restart of the machine with the 3/4 moon shaped pusher in position.
- Continuous feed model.
- Delivered with:
  - All stainless steel vegetable prep attachment with a lever-integrated long vegetable hopper (55,5mm diameter) and a large round hopper (215cm²)

Construction

- All blades (available on request) are made in stainless steel and dishwasher safe.
- Power: 370 W - single phase.
- 1 speed - 340 rpm - for precise cutting, slicing and dicing.
- Compact and portable design.
- Asynchronous silent industrial motor for heavy duty and longer life.
- Feeding arm and hopper are made entirely in stainless steel. Aluminum motor housing.
- Improved ventilation system to manage smoothly heavy duty use.
- Reinforced basement and feet to withstand the continuous movements of the unit.
- Improved fixing of long vegetable hopper pusher.

Included Accessories

- 1 of Ejector disc PNC 653772

Optional Accessories

- Stainless steel shredding disc with S-blades 4x4 mm PNC 650077 ❑

- Stainless steel shredding disc with S-blades 6x6 mm (can also be used for French fries) PNC 650078 ❑
- Stainless steel shredding disc with S-blades 8x8 mm (can also be used for French fries) PNC 650079 ❑
- Stainless steel shredding disc with S-blades 10x10 mm (can also be used for French fries) PNC 650080 ❑
- Stainless steel pressing/slicing disc with S-blades 0,6 mm (can be used for slicing or combined with grids) PNC 650081 ❑
- Stainless steel pressing/slicing disc with S-blades 1 mm (can be used for slicing or combined with grids) PNC 650082 ❑
- Stainless steel pressing/slicing disc with S-blades 2 mm (can be used for slicing or combined with grids) PNC 650083 ❑
- Stainless steel pressing/slicing disc with S-blades 3 mm (can be used for slicing or combined with grids) PNC 650084 ❑
- Stainless steel pressing/slicing disc with S-blades 4 mm (can be used for slicing or combined with grids) PNC 650085 ❑
- Stainless steel pressing/slicing disc with S-blades 5 mm (can be used for slicing or combined with grids) PNC 650086 ❑
- Stainless steel pressing/slicing disc with S-blades 6 mm (can be used for slicing or combined with grids) PNC 650087 ❑
- Stainless steel pressing/slicing disc with S-blades 8 mm (can be used for slicing or combined with grids) PNC 650088 ❑
- Stainless steel pressing/slicing disc with corrugated S-blades 2 mm (can be used for slicing or combined with grids) PNC 650089 ❑
- Stainless steel pressing/slicing disc with corrugated S-blades 3 mm (can be used for slicing or combined with grids) PNC 650090 ❑
- Stainless steel pressing/slicing disc with corrugated S-blades 6 mm (can be used for slicing or combined with grids) PNC 650091 ❑
- Bistrot Pack-set stainless steel discs (2mm and 5mm slicing pressing disc, 2mm grating disc) PNC 650092 ❑
- Set of 3 stainless steel discs for Pizza (2mm and 4mm pressing/ slicing discs with S-blades, 7mm grating disc) PNC 650107 ❑
- Cleaning tool for TRS, TRK & TR210 5-8-10 mm dicing grids PNC 650110 ❑
- Dicing set 10x10x10mm (10mm aluminum slicing pressing disc with 205mm diam. and 10mm grid) PNC 650112 ❑
- Aluminum pressing/slicing disc with straight blades 10 mm - for dicing PNC 650115 ❑
- Aluminum pressing/slicing disc with straight blades 8 mm - for dicing PNC 650116 ❑
- Stainless steel shredding disc with S-blades 2x8 mm PNC 650158 ❑
- Stainless steel shredding disc with S-blades 2x10 mm PNC 650159 ❑
- Stainless steel pressing/slicing disc with S-blades 10 mm (can be used for slicing or combined with grids) PNC 650160 ❑
- Stainless steel pressing/slicing disc with S-blades 12 mm (can be used for slicing or combined with grids) PNC 650161 ❑
- Stainless steel pressing/slicing disc with corrugated S-blades 8 mm (can be used for slicing or combined with grids) PNC 650162 ❑
- Stainless steel pressing/slicing disc with corrugated S-blades 10 mm (can be used for slicing or combined with grids) PNC 650164 ❑
- Stainless steel pressing/slicing disc with S-blades 13 mm (can be used for slicing or combined with grids) PNC 650165 ❑
- Stainless steel shredding disc with S-blades 2x2 mm PNC 650166 ❑
- Stainless steel shredding disc with S-blades 3x3 mm PNC 650167 ❑
- Set of 4 stainless steel discs (2mm and 5mm slicing pressing discs, 2mm and 7mm grating discs) PNC 650178 ❑
- Set of 7 stainless steel discs (2mm, 5mm and 10mm slicing pressing discs, 2mm and 7mm grating discs, 4x4mm shredding disc, 10x10mm dicing grid) PNC 650179 ❑
- Stainless steel work table with folding shelves and disk rack for TRK, TRS and TR210 table top models PNC 653283 ❑
- Dicing grid 5x5 mm PNC 653566 ❑
- Dicing grid 8x8 mm PNC 653567 ❑
- Dicing grid 10x10 mm PNC 653568 ❑
- Dicing grid 12x12 mm PNC 653569 ❑
- Dicing grid 20x20 mm PNC 653570 ❑
- Grid for chips 6x6 mm PNC 653571 ❑
- Grid for chips 8x8 mm PNC 653572 ❑
- Grid for chips 10x10 mm PNC 653573 ❑
- Support for 1 disc, diam. 175mm and 205mm PNC 653632 ❑
- Ejector disc PNC 653772 ❑
- Stainless steel grating disc 2 mm PNC 653773 ❑
- Stainless steel grating disc 3 mm PNC 653774 ❑
- Stainless steel grating disc 4 mm PNC 653775 ❑
- Stainless steel grating disc 7 mm PNC 653776 ❑
- Stainless steel grating disc 9 mm PNC 653777 ❑
- Stainless steel grating disc for knoedeln and bread PNC 653778 ❑
- Stainless steel grating disc for parmesan and bread PNC 653779 ❑

The company reserves the right to make modifications to the products without prior notice. All information correct at time of printing.

Vegetable Slicer
TRS Vegetable Slicer - 1 Speed - 370W

Front

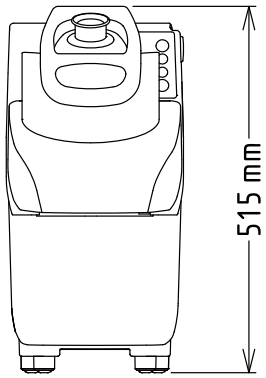

Side

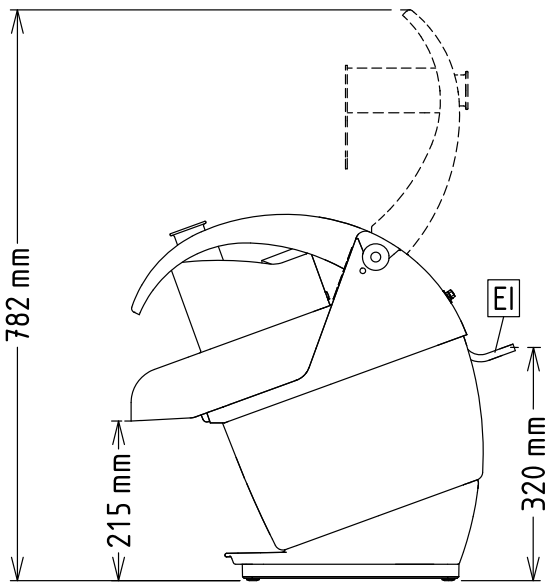

EI = Electrical inlet (power)

Top

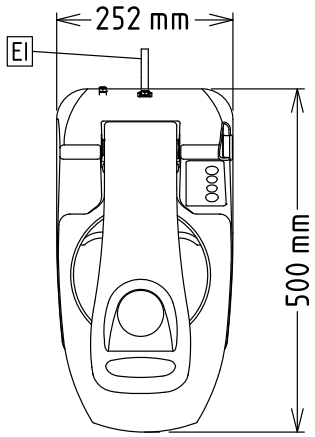

Electric	
Supply voltage:	
600418 (DTRS1V371)	220-240 V/1N ph/50 Hz
Electrical power max.:	0.37 kW
Total Watts:	0.37 kW
Capacity:	
Performance (up to):	550 kg/hour
Key Information:	
External dimensions, Width:	252 mm
External dimensions, Depth:	500 mm
External dimensions, Height:	515 mm
Shipping weight:	22 kg

The company reserves the right to make modifications to the products without prior notice. All information correct at time of printing.

2024.10.07